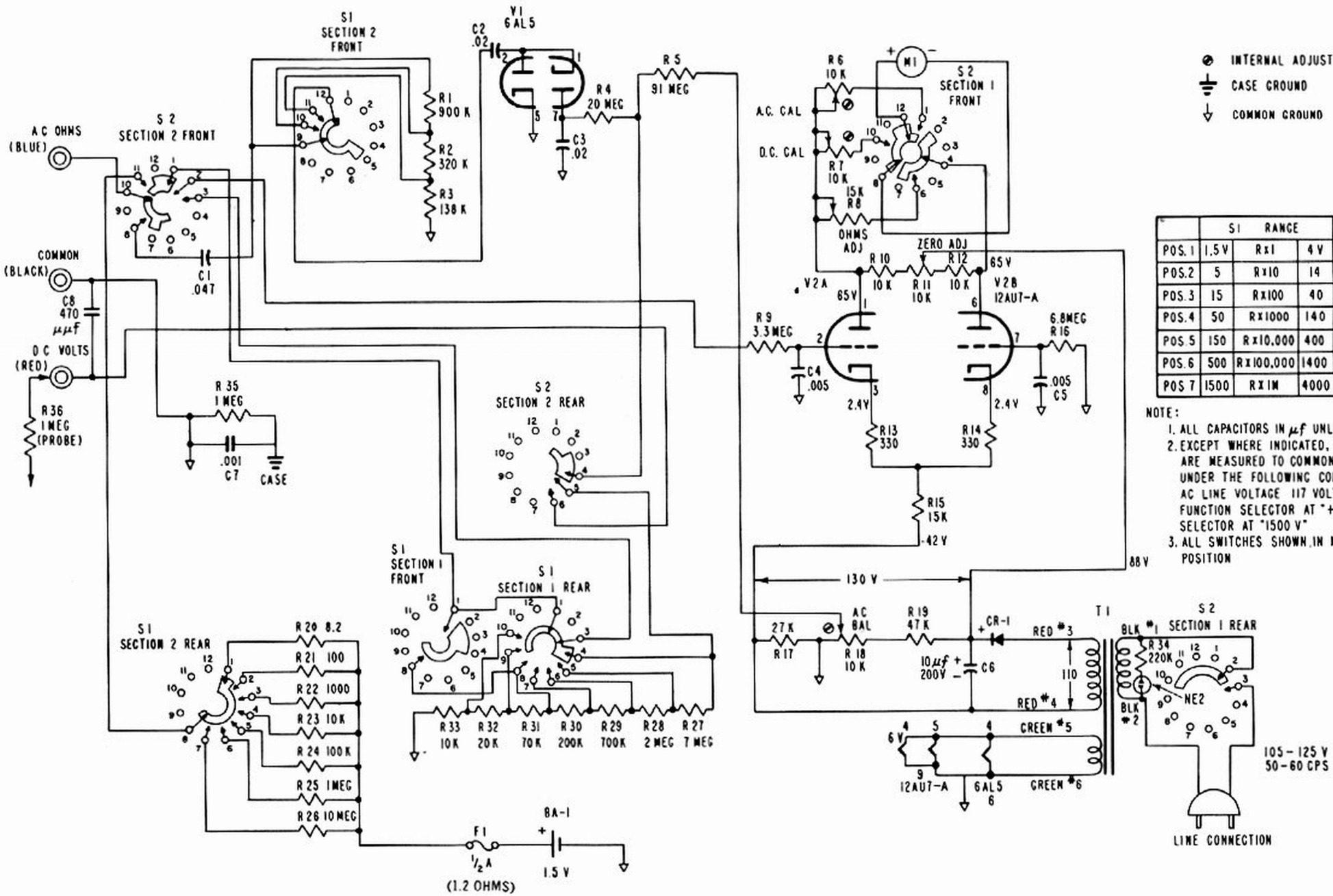

	S1 RANGE			S2 SELECTOR
POS. 1	1.5 V	R x 1	4 V	OFF
POS. 2	5	R x 10	14	A.C.
POS. 3	15	R x 100	40	D.C.−
POS. 4	50	R x 1000	140	D.C.+
POS. 5	150	R x 10,000	400	OHMS
POS. 6	500	R x 100,000	1400	
POS. 7	1500	R x 1M	4000	

NOTE:

1. ALL CAPACITORS IN μf UNLESS NOTED
2. EXCEPT WHERE INDICATED, ALL VOLTAGES ARE MEASURED TO COMMON GROUND UNDER THE FOLLOWING CONDITIONS: AC LINE VOLTAGE 117 VOLTS FUNCTION SELECTOR AT "+DC", RANGE SELECTOR AT "1500 V"
3. ALL SWITCHES SHOWN IN MAX. CCW. POSITION

Schematic Diagram of the WV-77E